## Layout Sample

AUTOMATION SYSTEM

### 1. Continuous oven ( Linkwel, 1500mm length of smoke stick )

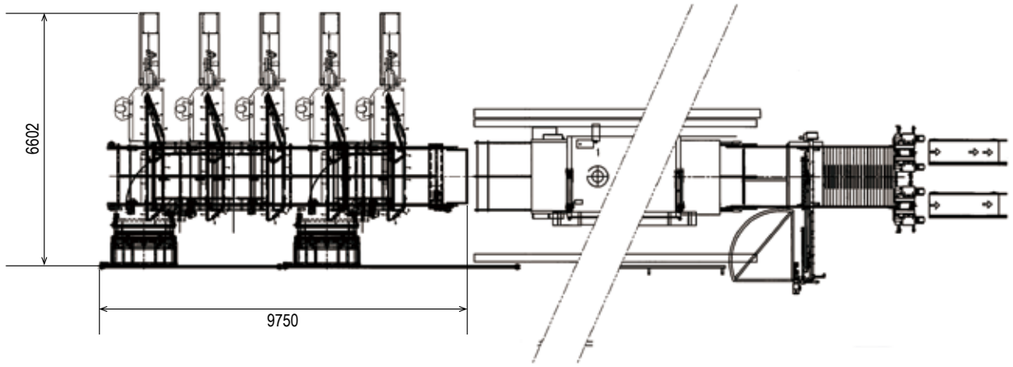


5 units of high speed linker to one line of continuous oven

### 2. Batch oven ( Linkwel, 900mm length of smoke stick )

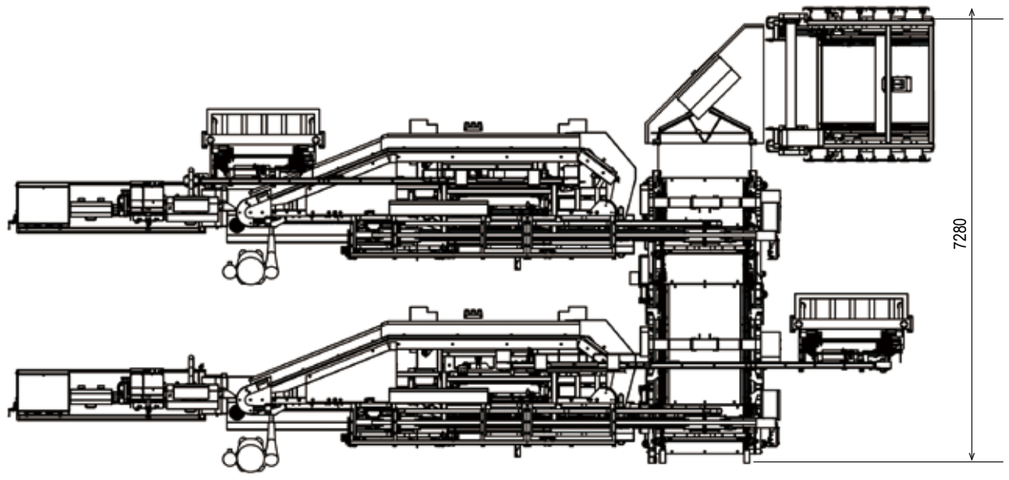


2 units of high speed linker to 1 unit of trolley system

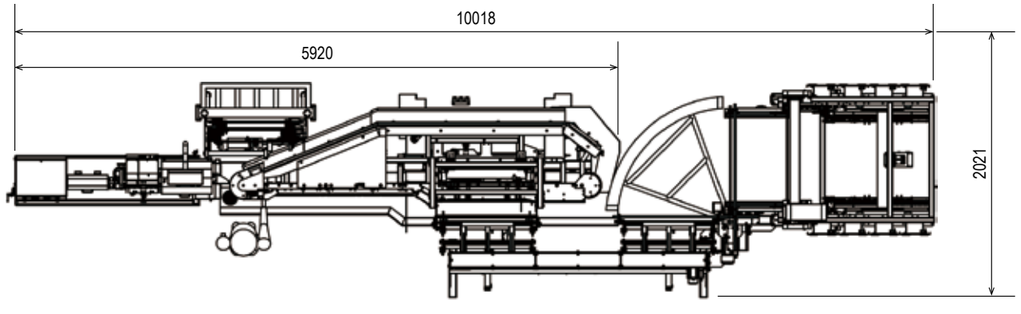


1 unit of high speed linker to 1 unit of trolley system

HITEC CO.,LTD
HEAD OFFICE & FACTORY
2565-8, NAGATSUTA-CHO, MIDORI-KU, YOKOHAMA 226-0026, JAPAN
PHONE +81-45-983-5000 FAX +81-45-983-0020
E-mail : sales@hitec-jp.com URL : www.hitec-jp.com

HITEC HITEC FOOD EQUIPMENT, INC.
U.S. HEAD OFFICE
818 Lively Blvd. Wood Dale, IL 60191, U.S.A.
PHONE +1-630-521-9460 FAX +1-630-521-9466
E-mail: information@hitec-usa.com URL : www.hitec-usa.com

20190424 Ver.1

*Solutions for today, Innovations for tomorrow.*

# AUTOMATION SYSTEM

## *Designed to your specification*

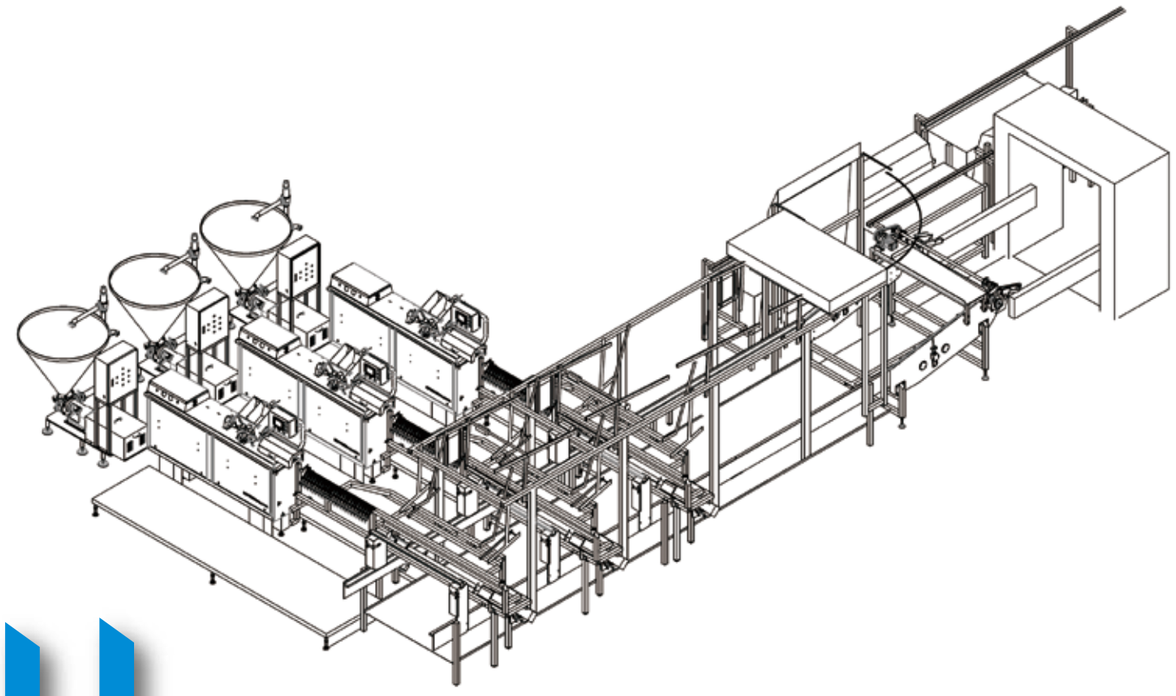

***REDUCE MANPOWER***
***INCREASE PRODUCTIVITY***
***REDUCE DOWN TIME***
***DECREASE BACK INJURIES***

# HITEC Solutions of stick loading system

## for both Batch oven and Continuous oven

*This system may operate slower than traditional manual operation, however the smooth and continuous operation makes for a **SAFER, LARGER OUTPUT OVERALL**.*

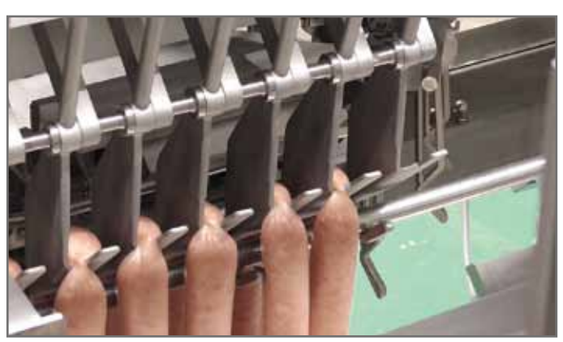

- Distinctive hanging conveyor
- Elimination of heavy lifting
- Reduce Labor costs,injuries
- Only one operator to tie front and tail end

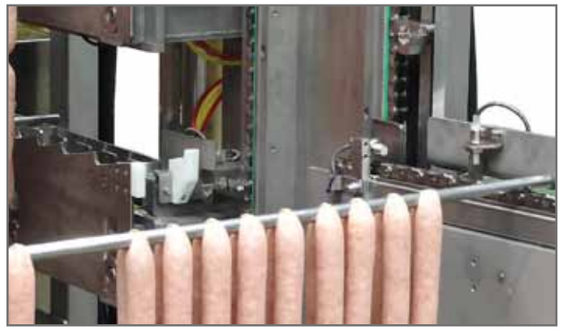

- Stick accumulation
- Stock conveyor adjusts traffic
- Stick is indexed for adjustment
- Sticks move over to trolley, or continuous oven

| | STICK LOADING SYSTEM with Batch oven one line | |
|---|---|---|
| CASING TYPE | Natural, Collagen, Cellulose | |
| TRANSFER CAPACITY | Max. 2,000 kg/h per one line (Production capacity depends on HITEC linker) | |
| ELECTRICAL REQUIREMENTS | 20kw | |
| PNEUMATIC REQUIREMENTS | Quality | Clean and Dry |
| | Pressure | 0.5 Mpa (5.0 bar) |
| | Consumption | 100 L / min |

## Suggestion to Continuous Oven

- Multi number of HITEC Linkers
- Round stick
- Stick wash
- Stick return
- Automatic stick supply

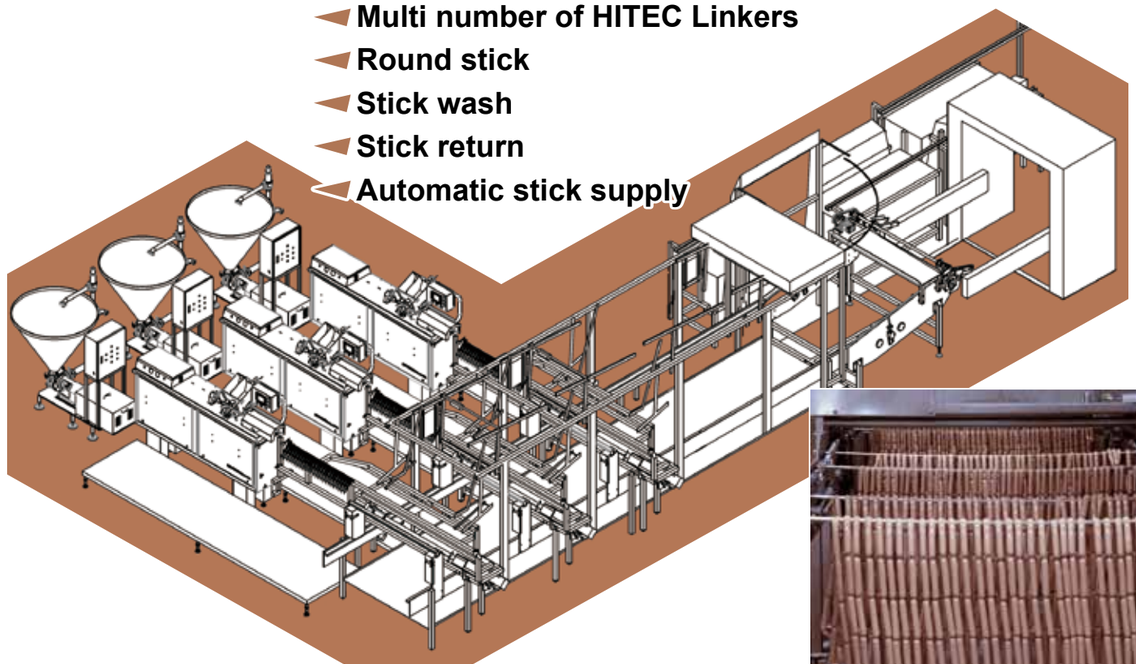

## Suggestion to Batch Oven

- Made to order trolley spec
- Round stick
- Full controlled stick numbers
- Alert for full loaded
- Layout depends on needs

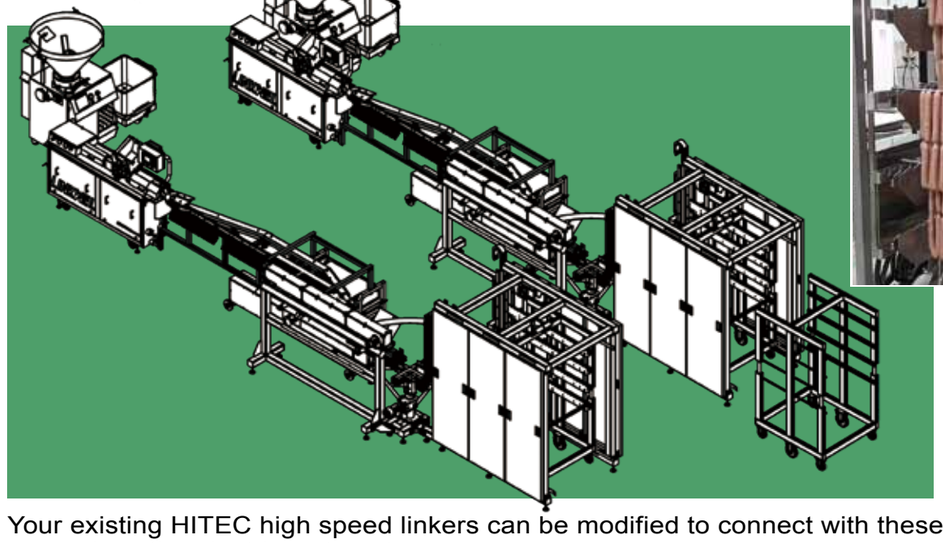

Your existing HITEC high speed linkers can be modified to connect with these lines so that you can reduce the plant investment.